NMF

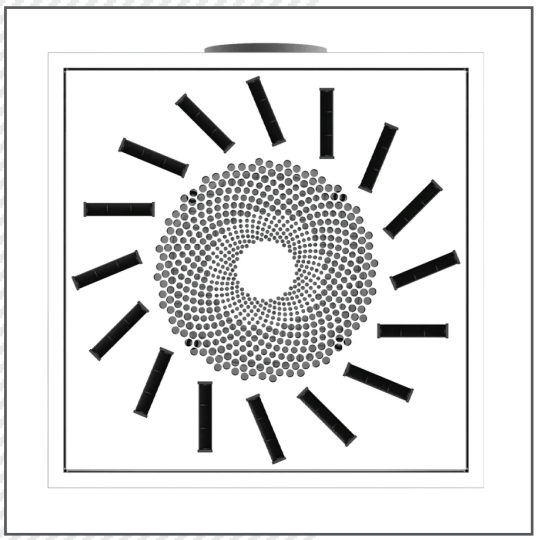

Characteristics

Supply and return swirl diffuser with adjustable throws and multifunction plenum. For modular false-ceiling installation for contemporary air supply and return. Installation height 2,5-4,1 m

Material

RAL 9010 white painted steel diffuser with deflection blades made of polypropylene RAL 9005 black. Double flow plenum made in insulated galvanized steel.

Fixing

Fixing on false-ceiling.

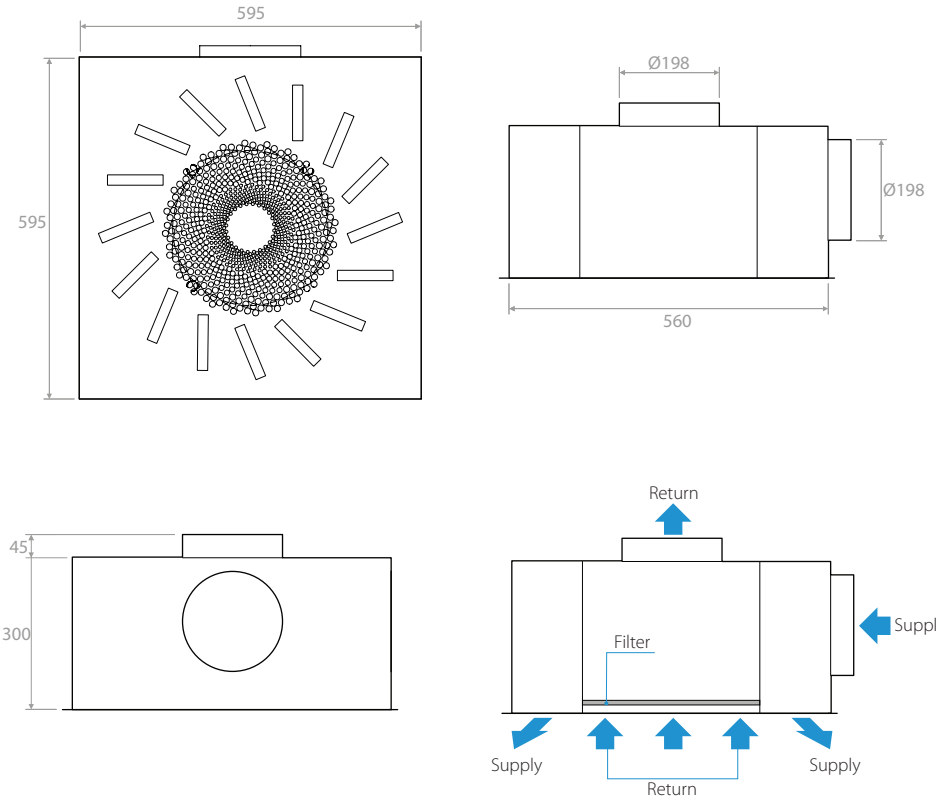

Technical data

Model	A_k [m²]	P [m³/h]		L_{WA} [dB(A)]		$X_{(0,20)}$ [m]		Dp_t [Pa]	
		min.	max.	min.	max.	min.	max.	min.	max.
NMF	0,0189	160	375	24	33	2,2	4,3	10	50

Construction changes reserved