FUTURE

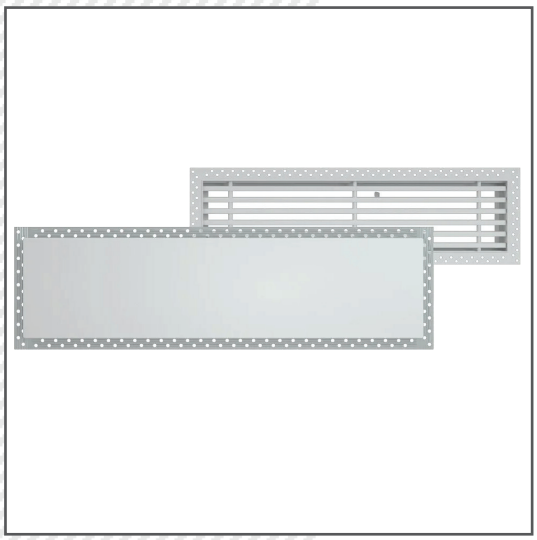

Characteristics Fixed bar grille with retractable frame and removable central core for supply and return air.

Material Anodized aluminium.

Versions FUTURE-10 fixed bar grille with 0 ° deflection.
FUTURE-15 fixed bar grille with 15° deflection.
FUTURE-T grille with front full screen. Frame and screen in aluminium RAL 9016 matt painted.

Fixing With fixing plate and screws for false floors with thickness less than 50 mm.

Accessories Plenum box in galvanized steel RAL 9005 painted with or without thermal insulation.
10 mm thick polyurethane mattress filter, G2 efficiency.

Construction changes reserved

FUTURE 10/15

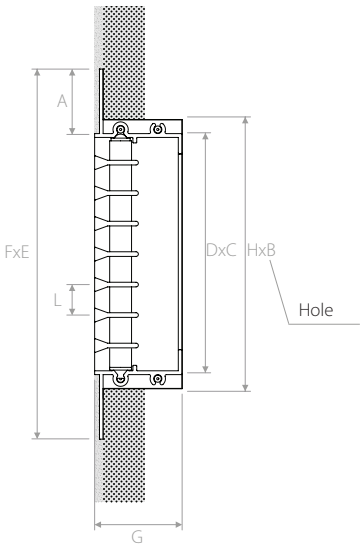

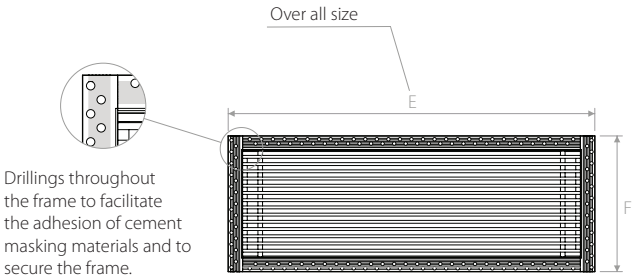

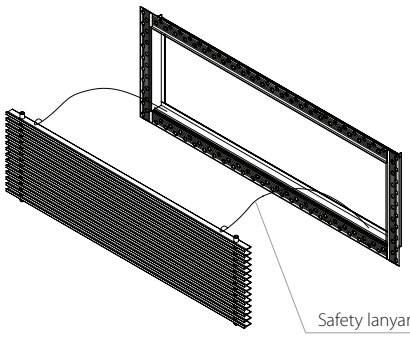

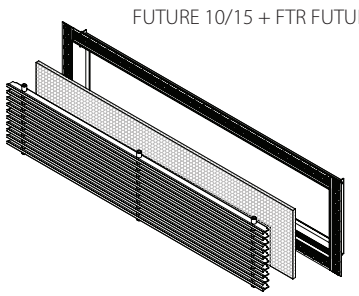

Model		A	B	C	D	E	F	G	H	L
FUTURE 10/15 200x100	mm	25	200	185	85	235	135	32	100	12,5
FUTURE 10/15 300x100	mm	25	300	285	85	335	135	32	100	12,5
FUTURE 10/15 400x100	mm	25	400	385	85	435	135	32	100	12,5
FUTURE 10/15 500x100	mm	25	500	485	85	535	135	32	100	12,5

FUTURE T

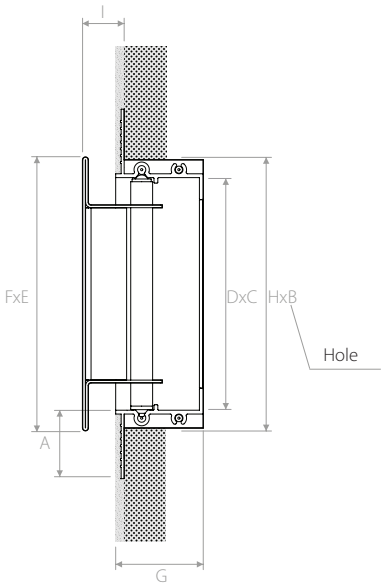

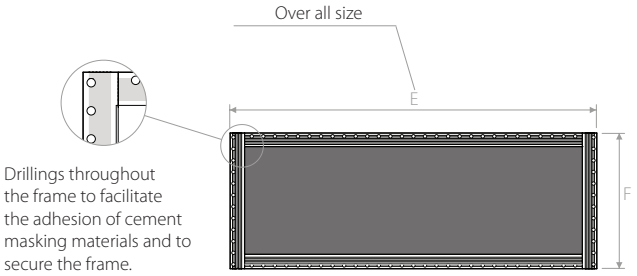

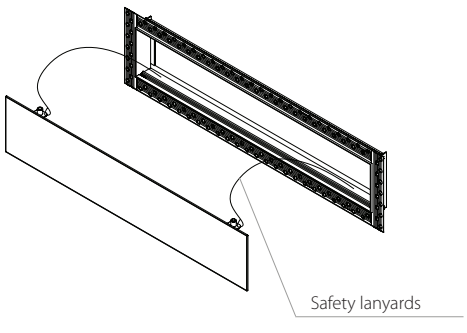

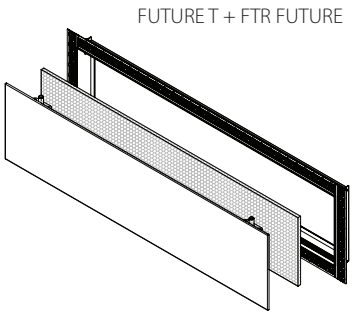

Model		A	B	C	D	E	F	G	I	H
FUTURE T 200x100	mm	25	200	185	85	235	135	32	12	100
FUTURE T 300x100	mm	25	300	285	85	335	135	32	12	100
FUTURE T 400x100	mm	25	400	385	85	435	135	32	12	100
FUTURE T 500x100	mm	25	500	485	85	535	135	32	12	100

Drawings

PLUGPBF1

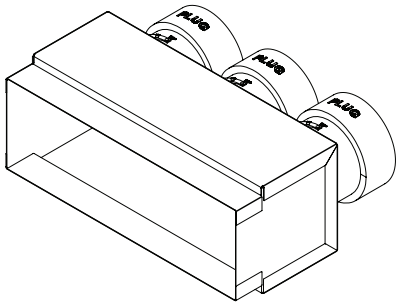

Installation example

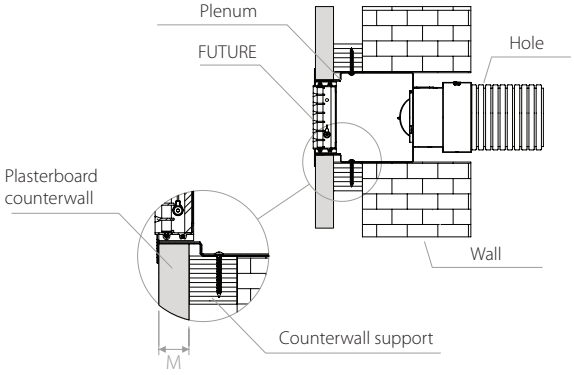

Section X-X

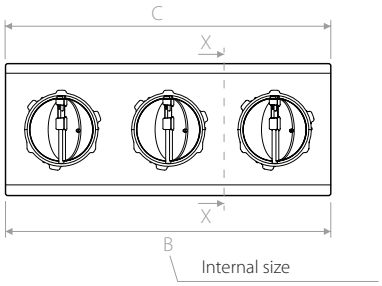

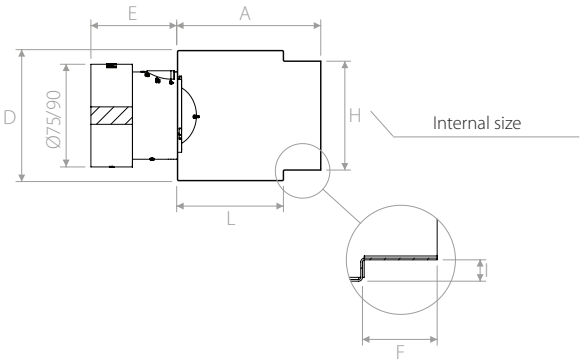

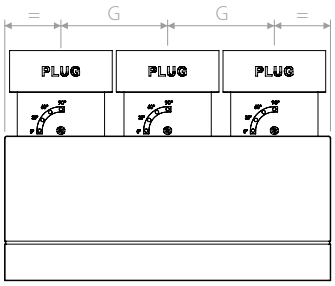

Model		A	B	C	D	E	F	G	H	I	L	M
PLUGPBF1 200x100	mm	135	202	205	124	80	35	100	102	10	100	25
PLUGPBF1 300x100	mm	135	302	305	124	80	35	100	102	10	100	25
PLUGPBF1 400x100	mm	135	402	405	124	80	35	100	102	10	100	25
PLUGPBF1 500x100	mm	135	502	505	124	80	35	100	102	10	100	25

Construction changes reserved

PLUGPBF2

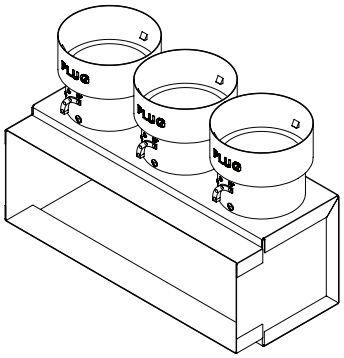

Installation example

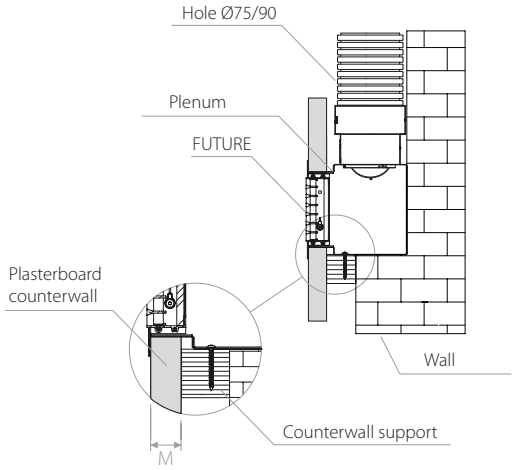

Section X-X

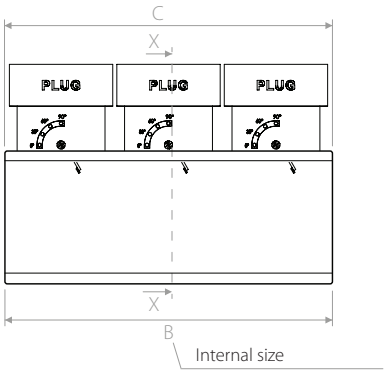

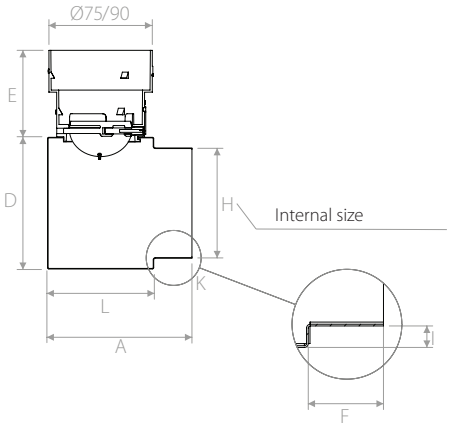

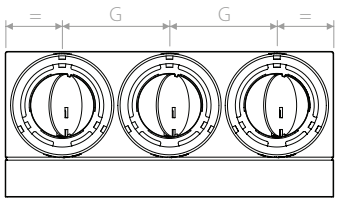

Model	N° PLUG 75/90		A	B	C	D	E	F	G	H	I	L	M
PLUGPBF2 200x100	2	mm	135	202	205	124	80	35	100	102	10	100	25
PLUGPBF2 300x100	3	mm	135	302	305	124	80	35	100	102	10	100	25
PLUGPBF2 400x100	4	mm	135	402	405	124	80	35	100	102	10	100	25
PLUGPBF2 500x100	5	mm	135	502	505	124	80	35	100	102	10	100	25

Technical data

FUTURE 10/15

Model	A_k [m^2]	Q [m^3/h]		L_{WA} [dB/(A)]		$X_{(0,25)}$ [m]		Dp_t [Pa]	
		min	max	min	max	min	max	min	max
FUTURE 200x100	0,0055	50	110	20	27	2,9	5,3	5	20
FUTURE 200x100	0,0083	80	160	20	34	3,5	6,6	5	20
FUTURE 200x100	0,0145	130	270	22	36	4,3	8,5	5	20
FUTURE 200x100	0,0206	190	390	24	38	5,3	10,3	5	20

FUTURE T

Model	A_k [m^2]	Q [m^3/h]		L_{WA} [dB/(A)]		Dp_t [Pa]	
		min	max	min	max	min	max
FUTURE T 200x100	0,0078	30	80	<20	25	5	20
FUTURE T 200x100	0,0104	40	110	20	34	5	20
FUTURE T 200x100	0,0130	50	130	22	36	5	20
FUTURE T 200x100	0,0156	60	160	24	38	5	20

Construction changes reserved