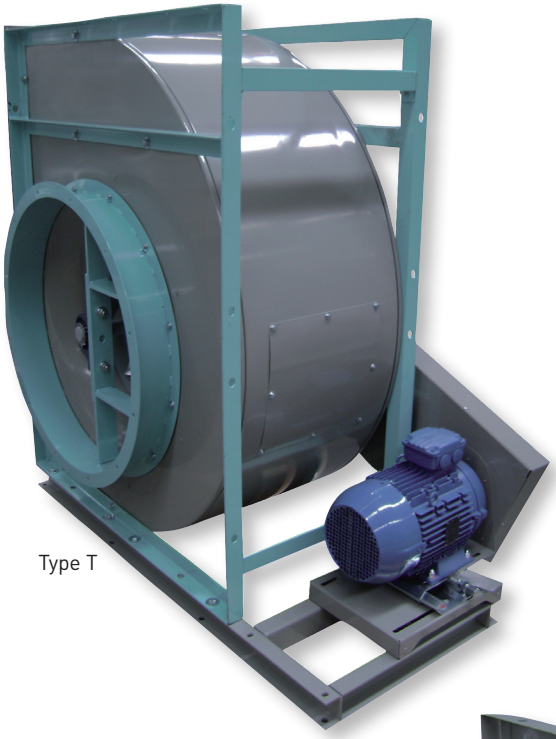

Type T

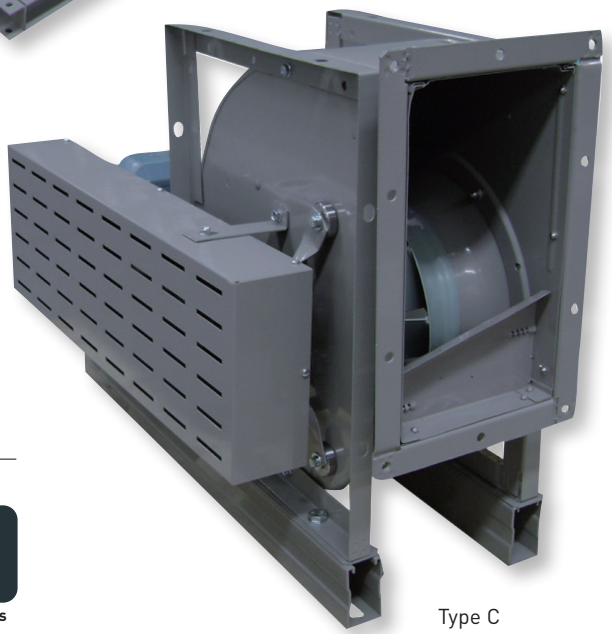

Type C

Range of belt driven single inlet centrifugal fans, designed for emergency smoke extraction in fire conditions and certified F400-120. The fans are also suitable for supply or exhaust applications in commercial and industrial buildings.
Sizes of this series are in accordance with AMCA standard 99-0098-76 and DIN323R20.

Operating limit
Each fan type has its maximum operating speed and power due to its mechanical design. The operating limit of BSP series is adjusted to meet the requirement of class I limit as defined in AMCA standard 99-2408-69.

Motor
Foot-mounted motor (B3), IP55, Class F insulation.
Electrical supplies:
- Three phase 220-240/380-415-50/60* Hz up to 3 kW.
  (*Check Easyvent for 60Hz available models)
- Three phase 380-415V-50Hz, for higher power motors and two speed motors.

1 speed motor are speed controllable by inverter.

Wheel
The wheel of BSP series has backward curved blades manufactured in cold rolled sheet steel with polyester powder coating finish.

Housing
For all sizes, the housing is manufactured in galvanized sheet steel with the housing fixed to the side plates in "pittsburg lock" form system.

Frame
The frame is manufactured with galvanized angular bars for type "C". For type "T", they are manufactured with sections of steel and finished with polyester powder coating.

Type C (models from 315 to 630)
This type has a frame fitted on both sides of the fan which gives better strength and rigidity. It allows mounting in three different orientations, either CW or CCW rotation.

Type T (models from 710 to 1000)
This type has a welded frame giving increased stiffness and rigidity required for higher operating performance, either CW or CCW rotation.

On request
Inspection door (IP) and drain hole (CD).
Epoxy paint.
2 speed motors.

Specific applications

F400-120 — Approved to EN12101-3 standard 0370-CPR-1152

100ºC — Continuous

P — Car parks

Industrial and commercial kitchens

Ex — Versions

Deep groove ball bearing type for medium duty

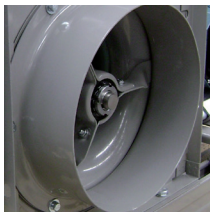

Assembly type C

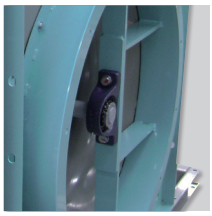

Assembly type T

ATEX versions BSP
On request, explosion proof versions for BSP, in accordance with ATEX Directive for three phase models:

- ATEX Flameproof - Gas
  Ex II 2G Ex d IIB T4
  Ex II 2G Ex d IIB(H2) T4
  (with Ex d IIC T4 motor)
- ATEX Increased safety - Gas
  Ex II 2G Ex e II T3
- ATEX - Dust
  Suspended flammable particles and non-conductive dust:
  Ex II 3D Ex tc IIIB T125ºC
  Conductive dust:
  Ex II 3D Ex tc IIIC T125ºC
  (with IP65 motor)

TECHNICAL CHARACTERISTICS

Before making any electrical connection ensure that the voltage and frequency of the mains electrical supply matches that of the fan data place label.

Model	Minimum motor power (kW)	Maximum motor power (kW)	N. min (rpm)	N. max (rpm)	Maximum temperature in continuous operation (ºC)	Weight (kg) (With bigger motor)
315	0,25	3	1400	3200	100	81
355	0,25	4	1200	2800	100	94
400	0,55	4	1300	2500	100	105
450	0,55	5,5	1000	2200	100	139
500	0,75	5,5	900	1950	100	157
560	0,75	7,5	800	1800	100	190
630	0,75	7,5	700	1500	100	222
710	1,1	11	600	1350	100	373
800	1,1	15	500	1200	100	448
900	1,5	15	500	1050	100	514
1000	3	18,5	500	950	100	624

POSITIONS

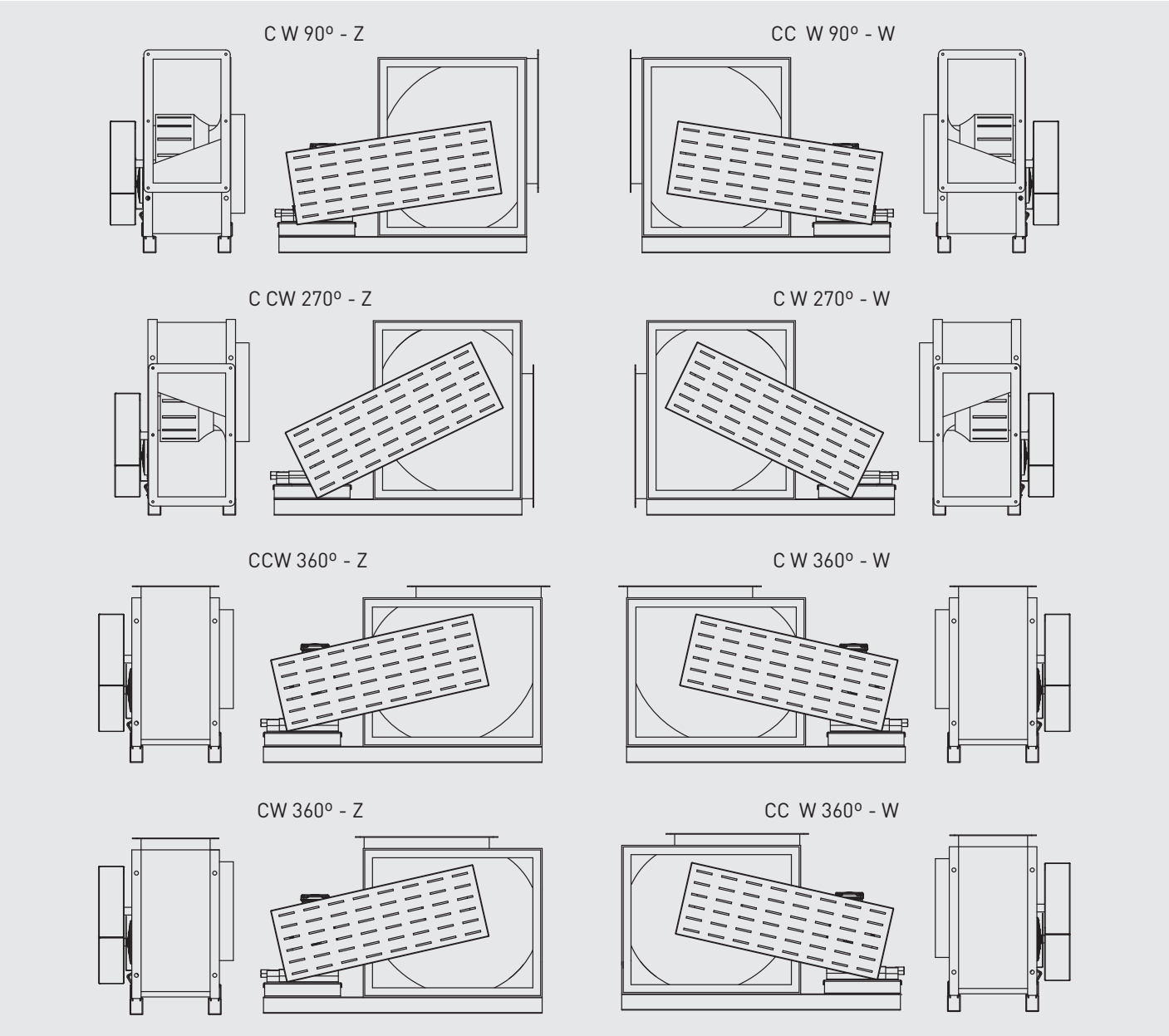

REFERENCE

B	S	P	/	4	1000	TM	22 kW	700	90	CCW	F400	400/690V50	W	ID P3	+	CD P4	EPOXI
1				2	3	4	5	6	7	8	9	10	11	12		13	14

1 - : Serie
2 - : Number of poles (motor)
3 - : Impeller diameter (mm)
4 - : Fan type
5 - : Motor power (kW)
6 - : Fan speed (rpm)
7 - : Orientation (º)
8 - : Tipo rotación
9 - : Certificación
10 - : Electrical supply
11 - : Motor position (facing the drive side):
Z: Motor on left side.
W: Motor on right side
12 - : Inspection door position (IP: option)
13 - : Drain hole position (CD: option)
14 - : Painting (option)

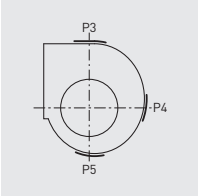

DIMENSIONS (mm)

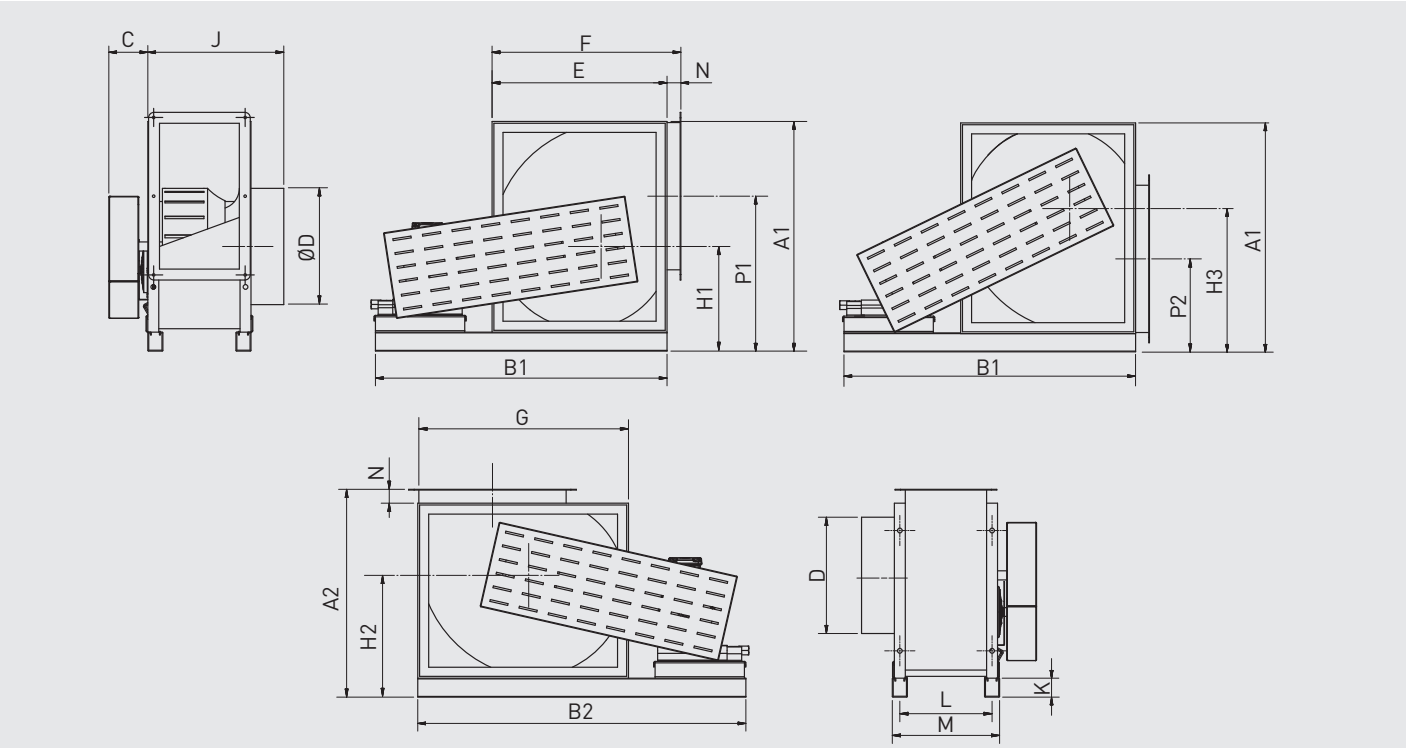

Model	A1	A2	B1	B2	C min	C max	D	E	F	G	H1	H2	H3	J	K	L	M	N	P1	P2
					(+/- 15 mm)															
315	630	570	900	1000	120	200	315	480	518	578	287	334	343	373	52	253	283	38	431	257
355	706	630	1000	1100	120	200	355	548	578	654	317	370	389	407	52	287	327	30	486	284
400	788	702	1000	1100	120	200	400	612	650	736	351	412	437	434	52	314	354	38	540	310
450	879	778	1100	1200	120	200	450	681	726	827	388	456	491	468	52	348	388	45	600	341
500	970	852	1200	1300	120	200	500	750	800	918	427	500	543	505	52	385	425	50	656	376
560	1082	944	1300	1400	120	200	560	844	892	1030	472	554	610	553	52	433	483	48	732	416
630	1209	1050	1400	1600	120	200	630	945	998	1157	524	616	685	603	52	483	533	53	815	458

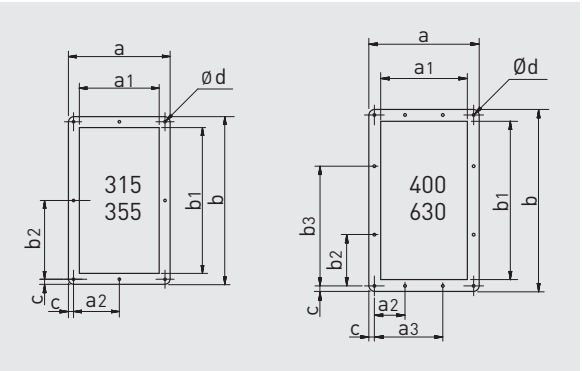

Model	a	a1	a2	a3	b	b1	b2	b3	c	d
315	279	221	127	-	460	404	217	-	13	9
355	303	245	139	-	508	452	241	-	13	9
400	333	272	91	216	562	506	168	368	13	9
450	364	306	108	230	624	568	199	399	13	9
500	401	343	113	262	694	638	209	459	13	9
560	439	381	132	281	770	714	247	497	13	9
630	489	431	143	320	856	800	265	565	13	9

DIMENSIONS (mm)

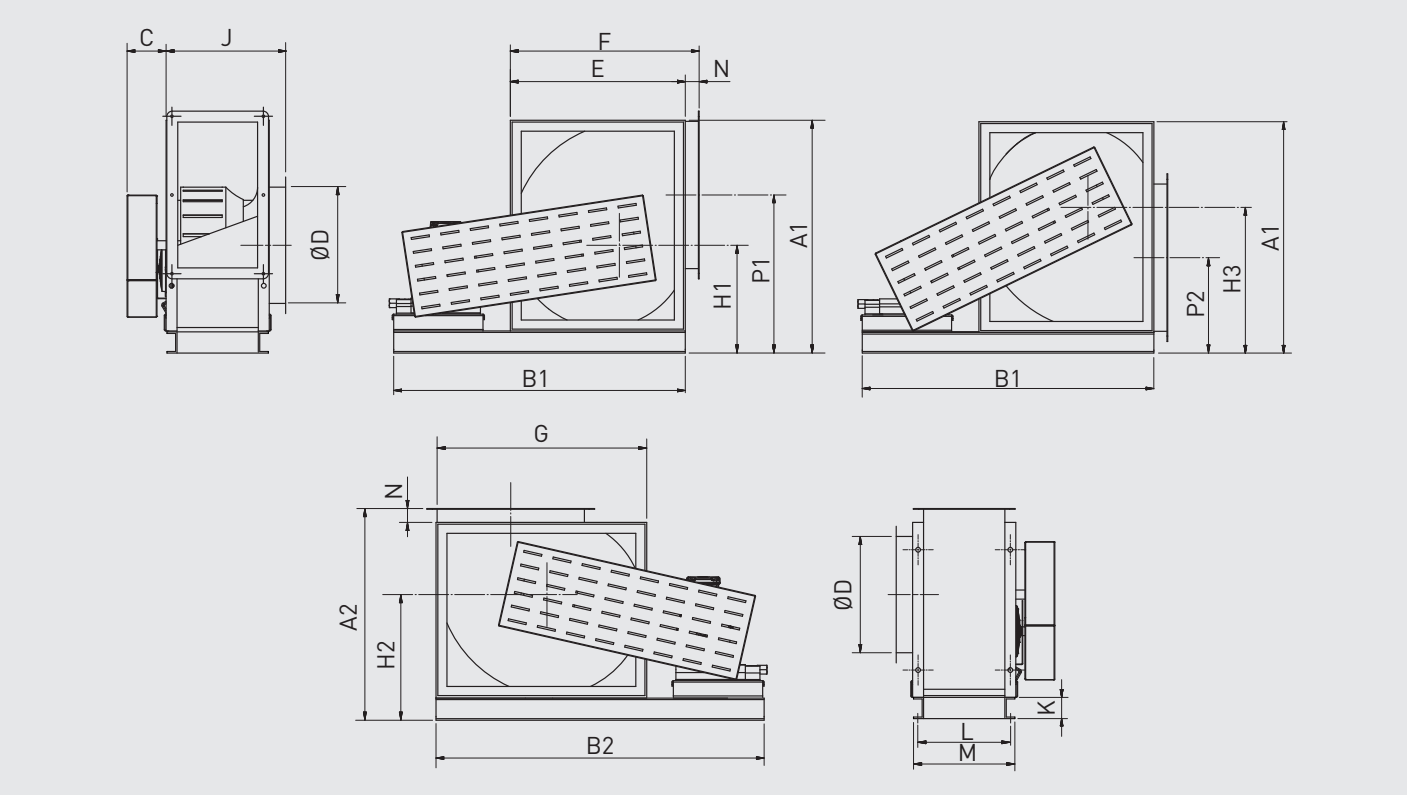

Model	A1	A2	B1	B2	C min	C max	D	E	F	G	H1	H2	H3	J	K	L	M	N	P1	P2
					(+/- 15 mm)															
710	1382	1200	1600	1800	120	200	710	1057	1120	1302	610	716	772	649	80	529	579	63	940	536
800	1548	1334	1700	2000	120	200	800	1180	1254	1468	679	794	869	703	80	583	633	74	1052	590
900	1728	1488	1850	2150	120	200	900	1319	1408	1648	750	884	978	765	80	645	695	89	1170	652
1000	1890	1620	1950	2350	120	200	1000	1450	1540	1810	815	964	1075	833	80	713	763	90	1266	722

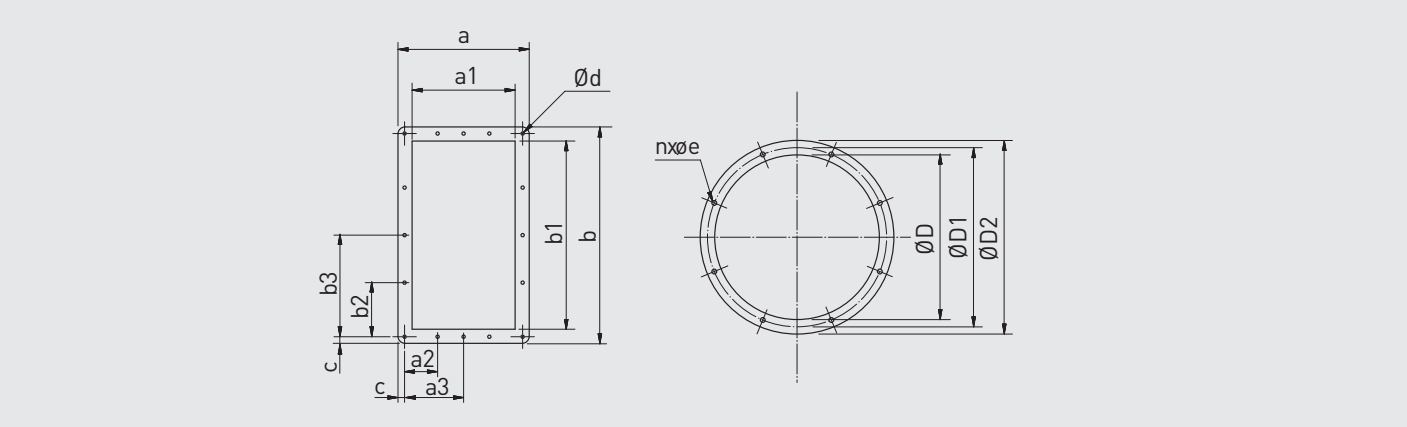

Model	a	a1	a2	a3	b	b1	b2	b3	c	d	D	D1	D2	n x e
710	535	477	141	255	954	898	264	464	13	9	710	751	796	8x10
800	589	531	142	282	1062	1006	268	518	13	9	800	837	886	12x12
900	651	593	147	313	1186	1130	280	580	13	9	900	934	986	12x12
1000	719	661	156	347	1322	1266	298	648	13	9	1000	1046	1086	12x12

PERFORMANCE CURVES - EXAMPLE OF SELECTION

- Airflow: q_v = 6660 m³/h
- Outlet velocity: V = 6.77 m/s
- Dynamic pressure: Pd = 27 Pa
- Total pressure: p_t = 1250 Pa
- Fan speed: N = 1510 rpm
- Absorbed power: W = 3.22 kW
- Total effciency: η = 71.8 %
- Sound power level: Lw(A) = 81 dB(A)

- The A-weighted sound ratings shown have been calculated per AMCA standard 301. Values shown are for inlet Lwi(A) sound power levels for installation type B - free inlet, ducted outlet. Ratings do not include the effect of duct end corrections.
- Performance shown is for Installation type B - free inlet, ducted outlet. Performance ratings do not include the effects of appurtenances in the airstream. Power rating kW does not include drive losses.

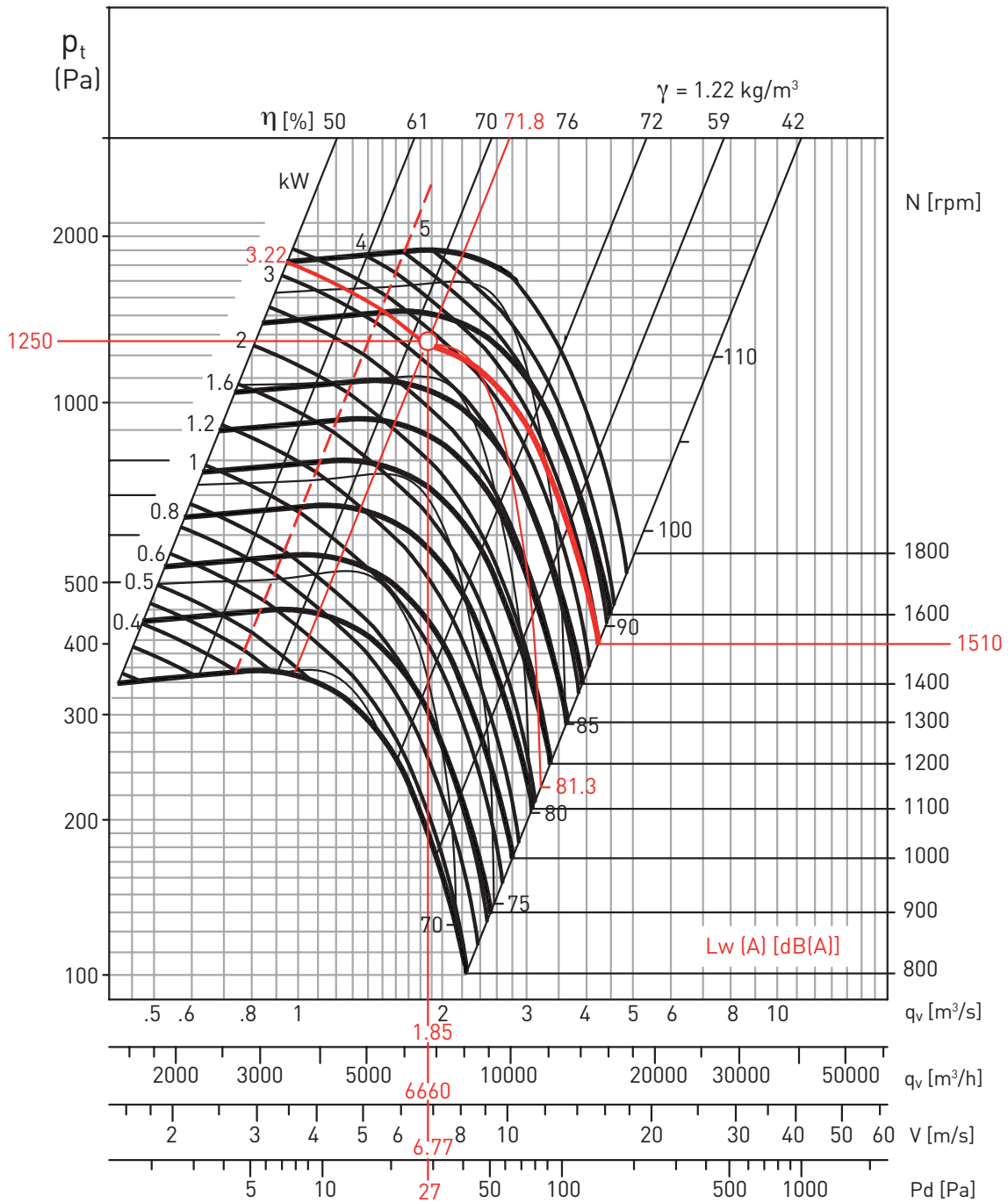

- Performance shown is for Installation type B - free inlet, ducted outlet. Performance ratings do not include the effects of appurtenances in the airstream. Power rating kW does not include drive losses.
- The A-weighted sound ratings shown have been calculated per AMCA standard 301. Values shown are for inlet Lwi(A) sound power levels for installation type B - free inlet, ducted outlet. Ratings do not include the effect of duct end corrections.

BSP 315

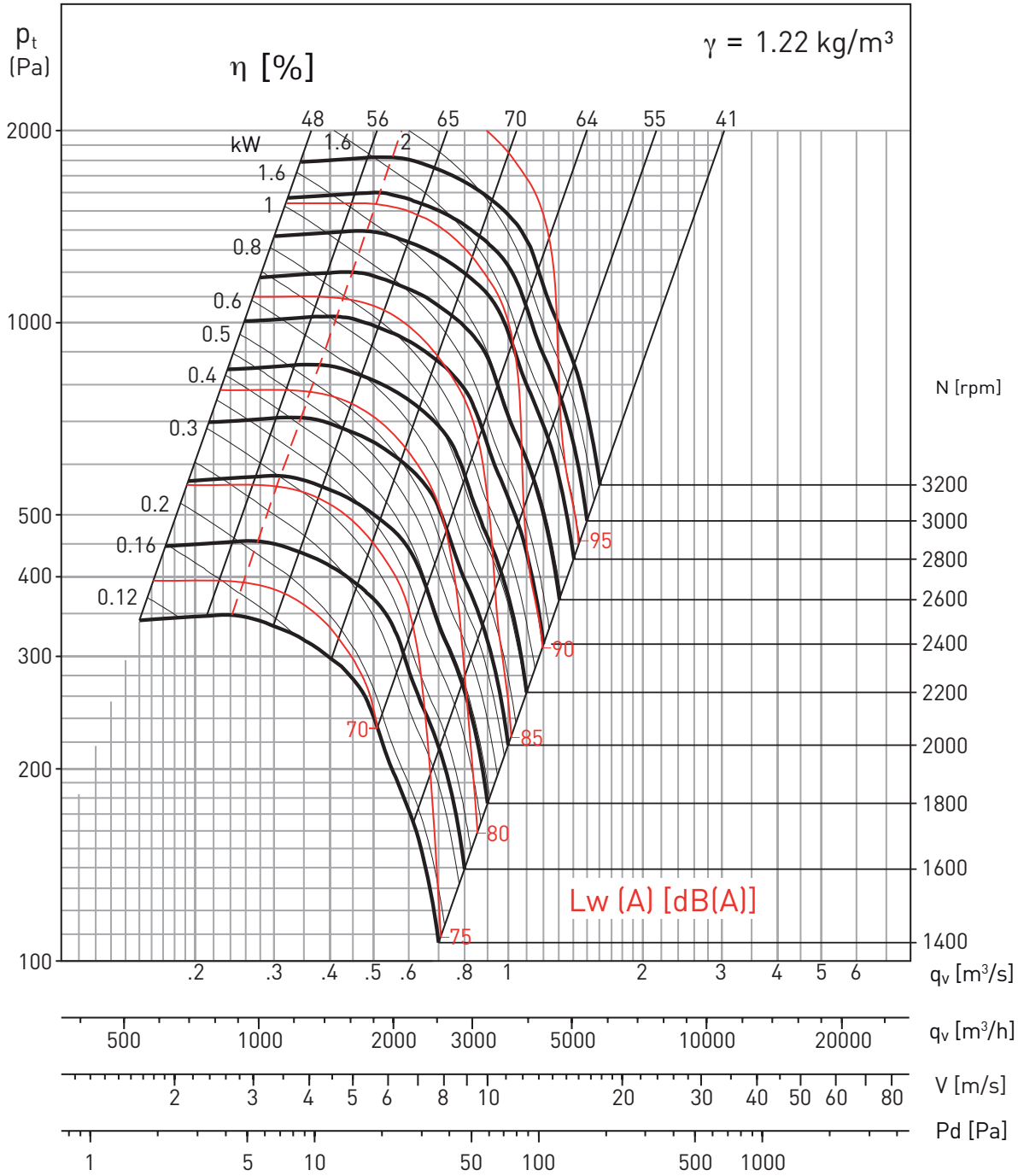

- Performance shown is for Installation type B - free inlet, ducted outlet. Performance ratings do not include the effects of appurtenances in the airstream. Power rating kW does not include drive losses.
- The A-weighted sound ratings shown have been calculated per AMCA standard 301. Values shown are for inlet Lwi(A) sound power levels for installation type B - free inlet, ducted outlet. Ratings do not include the effect of duct end corrections.

BSP 355

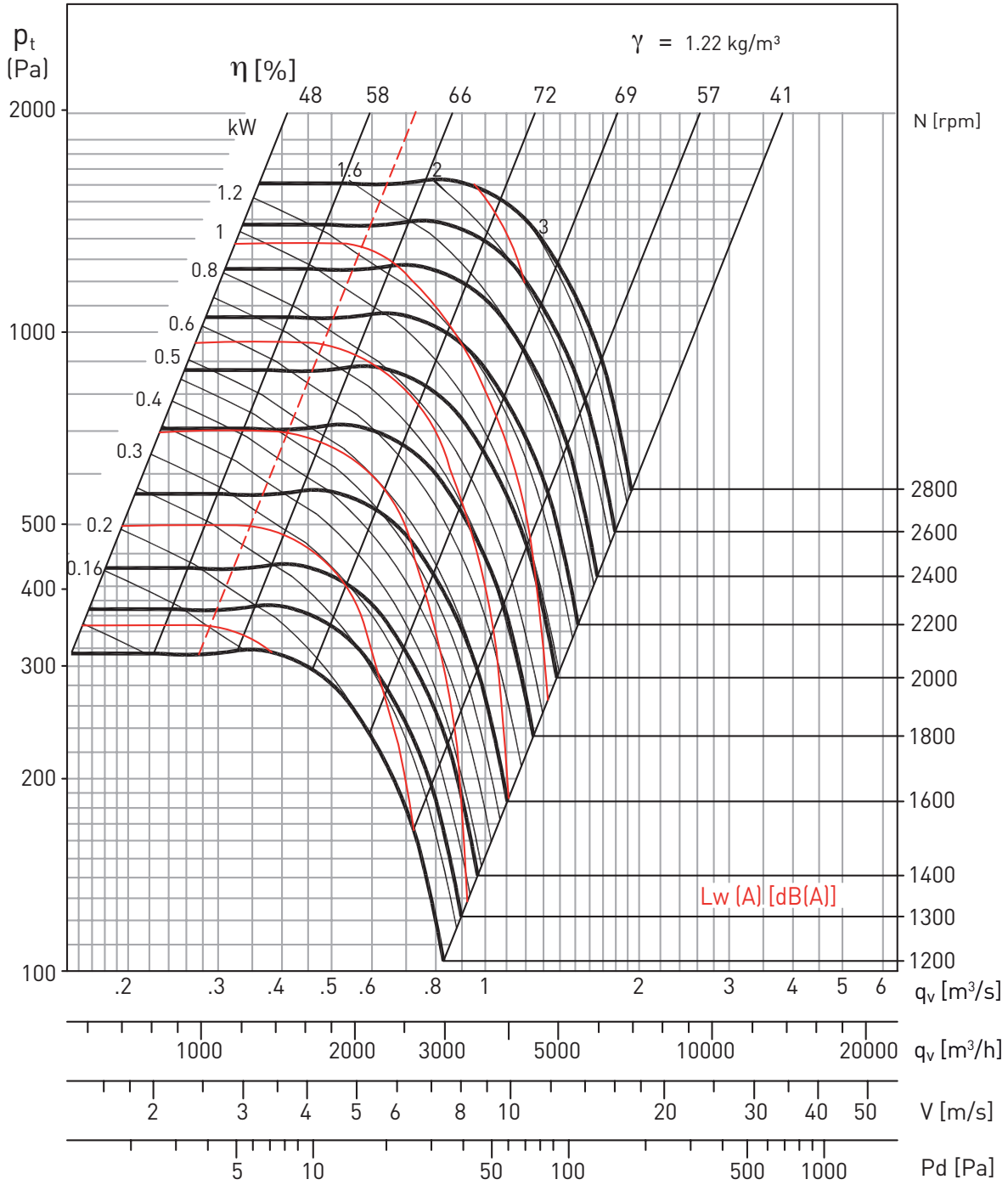

- Performance shown is for Installation type B - free inlet, ducted outlet. Performance ratings do not include the effects of appurtenances in the airstream. Power rating kW does not include drive losses.
- The A-weighted sound ratings shown have been calculated per AMCA standard 301. Values shown are for inlet Lwi(A) sound power levels for installation type B - free inlet, ducted outlet. Ratings do not include the effect of duct end corrections.

BSP 400

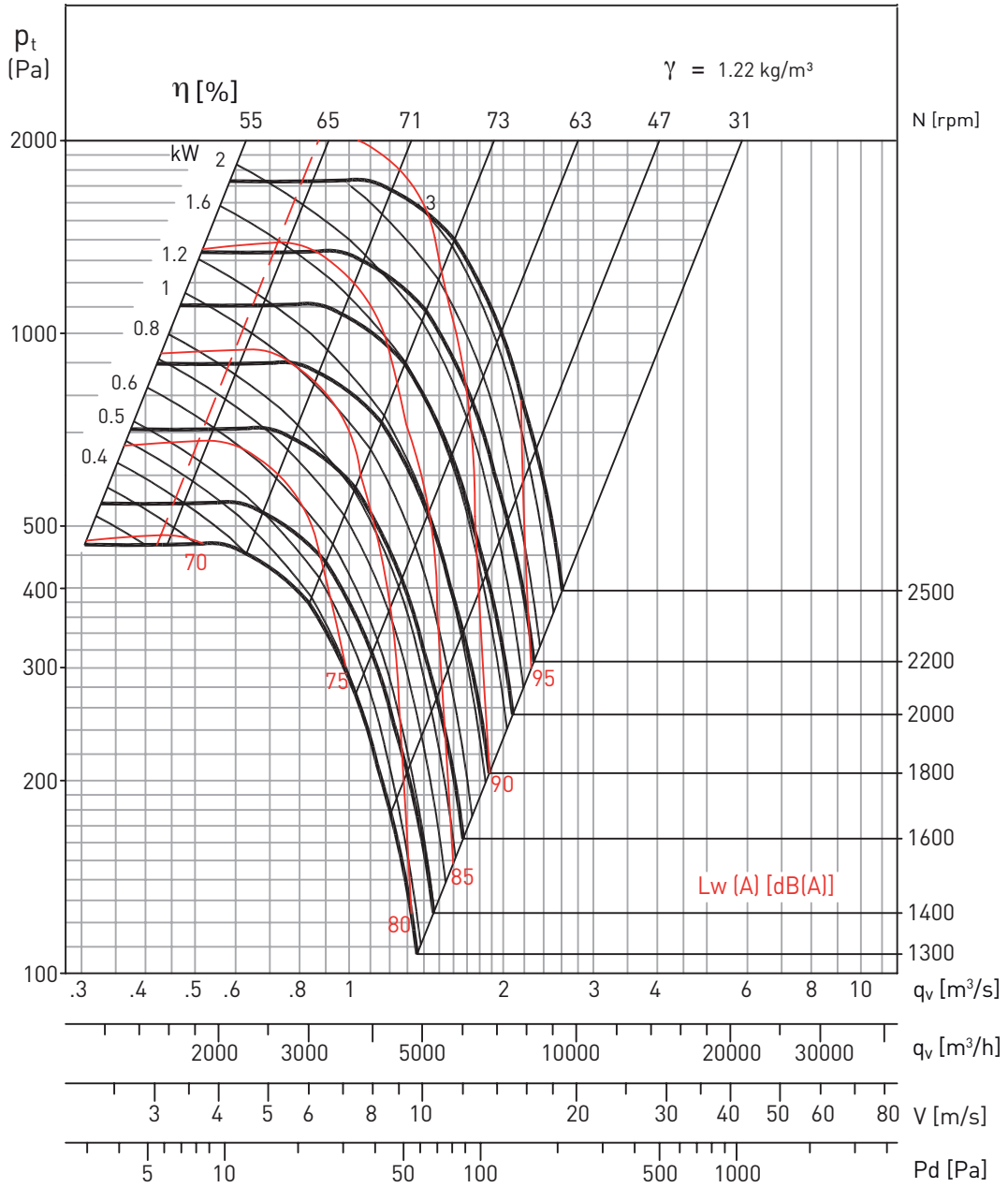

- Performance shown is for Installation type B - free inlet, ducted outlet. Performance ratings do not include the effects of appurtenances in the airstream. Power rating kW does not include drive losses.
- The A-weighted sound ratings shown have been calculated per AMCA standard 301. Values shown are for inlet Lwi(A) sound power levels for installation type B - free inlet, ducted outlet. Ratings do not include the effect of duct end corrections.

BSP 450

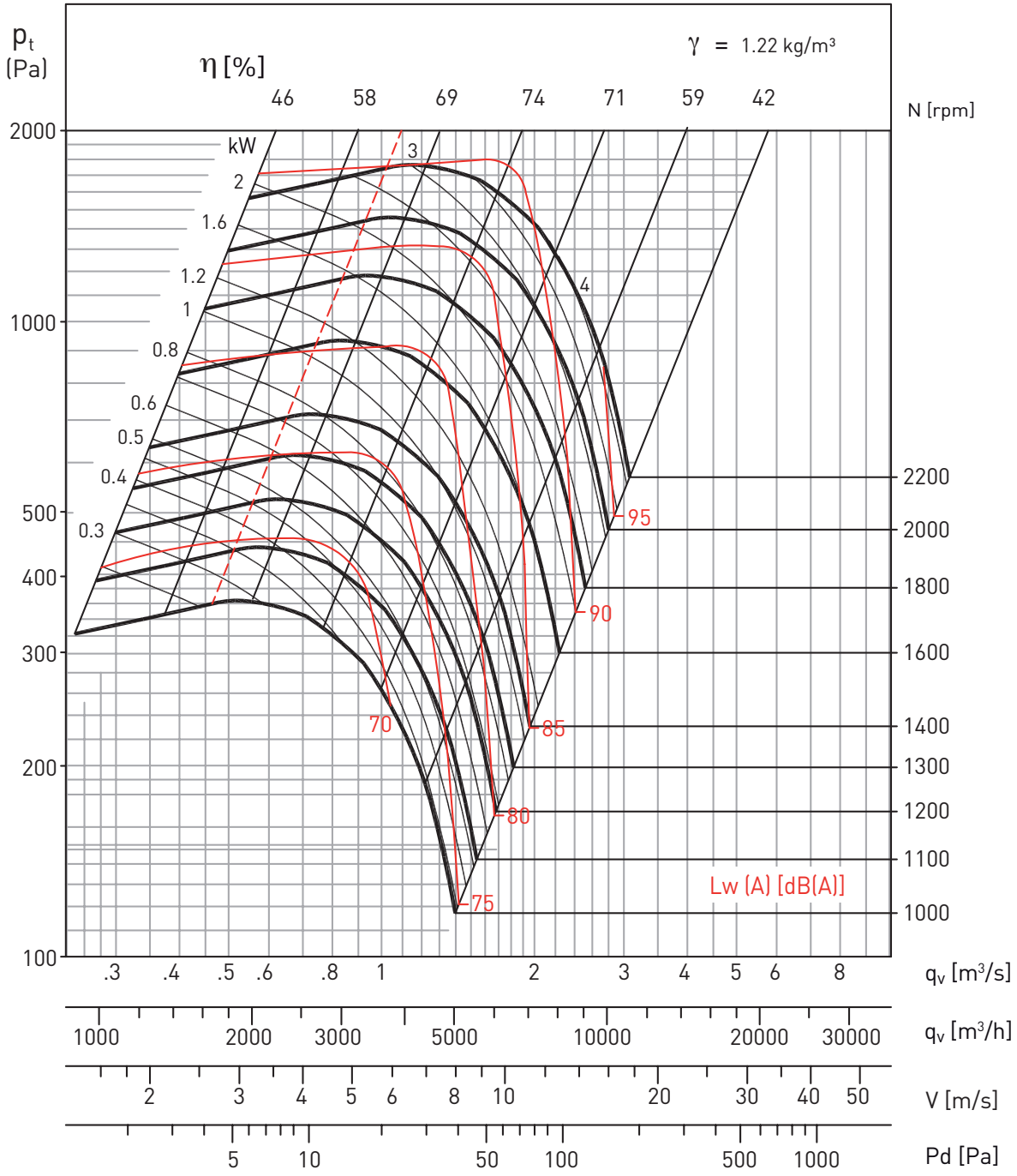

- Performance shown is for Installation type B - free inlet, ducted outlet. Performance ratings do not include the effects of appurtenances in the airstream. Power rating kW does not include drive losses.
- The A-weighted sound ratings shown have been calculated per AMCA standard 301. Values shown are for inlet Lwi(A) sound power levels for installation type B - free inlet, ducted outlet. Ratings do not include the effect of duct end corrections.

BSP 500

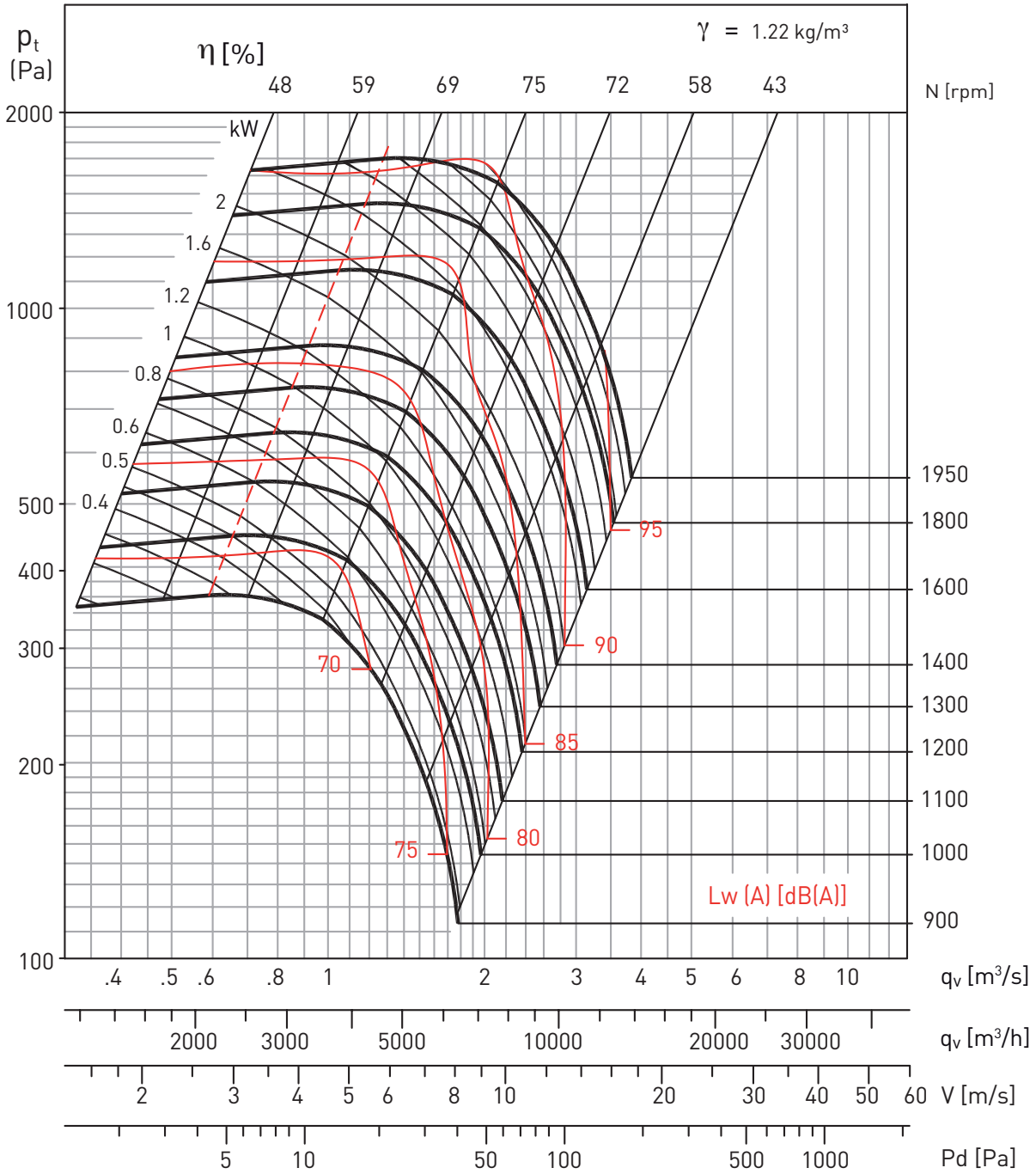

- Performance shown is for Installation type B - free inlet, ducted outlet. Performance ratings do not include the effects of appurtenances in the airstream. Power rating kW does not include drive losses.
- The A-weighted sound ratings shown have been calculated per AMCA standard 301. Values shown are for inlet Lwi(A) sound power levels for installation type B - free inlet, ducted outlet. Ratings do not include the effect of duct end corrections.

BSP 560

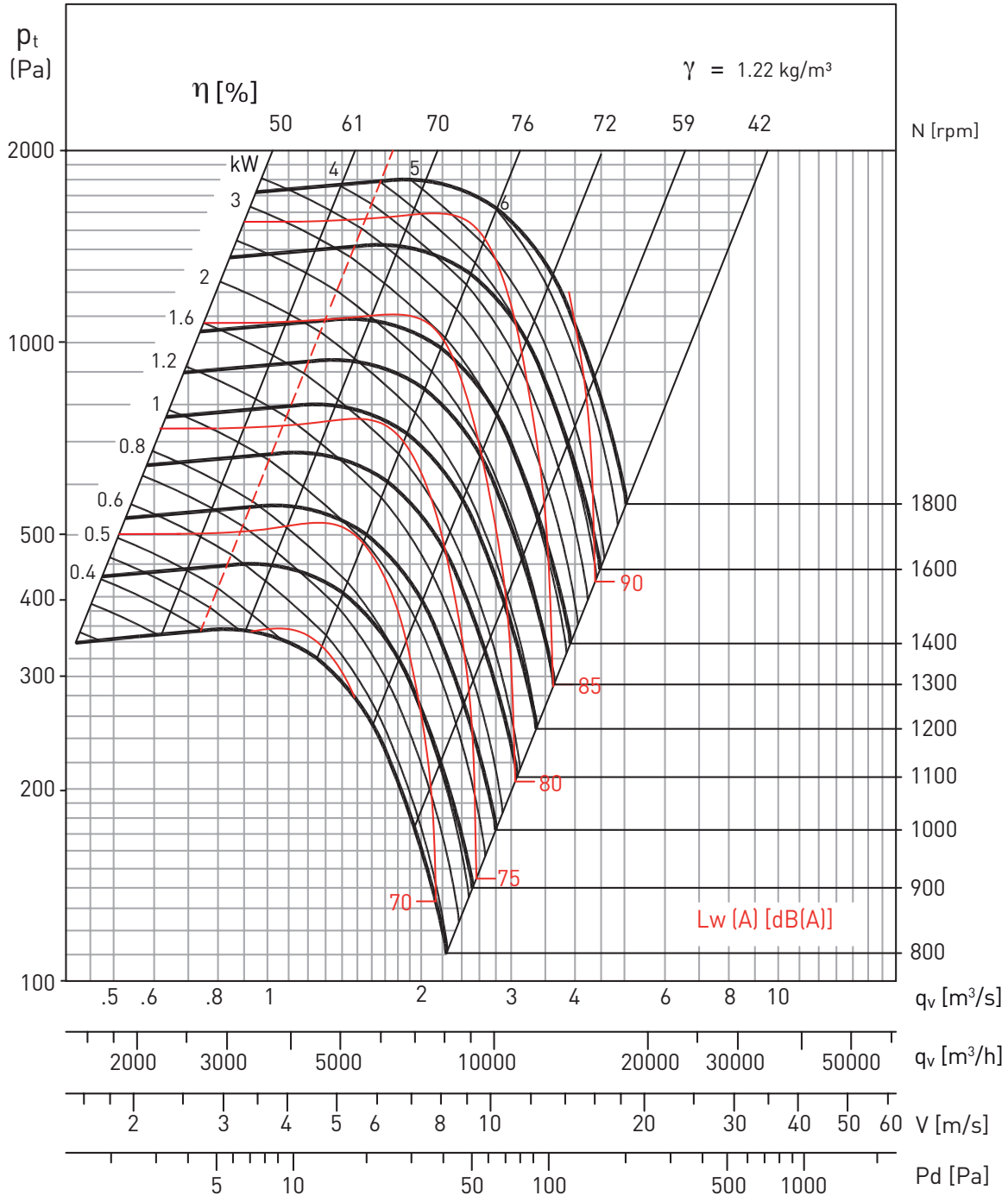

- Performance shown is for Installation type B - free inlet, ducted outlet. Performance ratings do not include the effects of appurtenances in the airstream. Power rating kW does not include drive losses.
- The A-weighted sound ratings shown have been calculated per AMCA standard 301. Values shown are for inlet Lwi(A) sound power levels for installation type B - free inlet, ducted outlet. Ratings do not include the effect of duct end corrections.

BSP 630

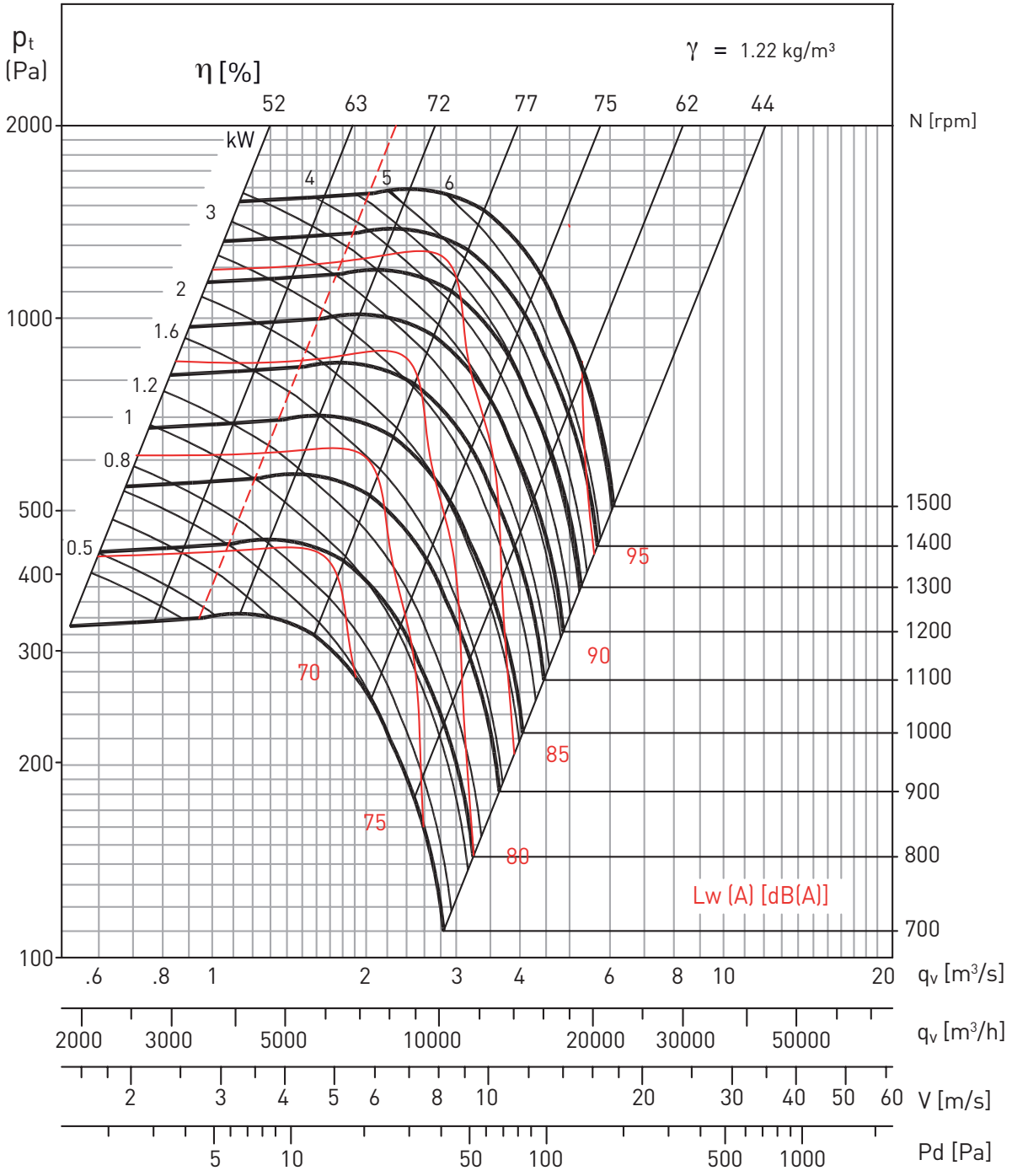

- Performance shown is for Installation type B - free inlet, ducted outlet. Performance ratings do not include the effects of appurtenances in the airstream. Power rating kW does not include drive losses.
- The A-weighted sound ratings shown have been calculated per AMCA standard 301. Values shown are for inlet Lwi(A) sound power levels for installation type B - free inlet, ducted outlet. Ratings do not include the effect of duct end corrections.

BSP 710

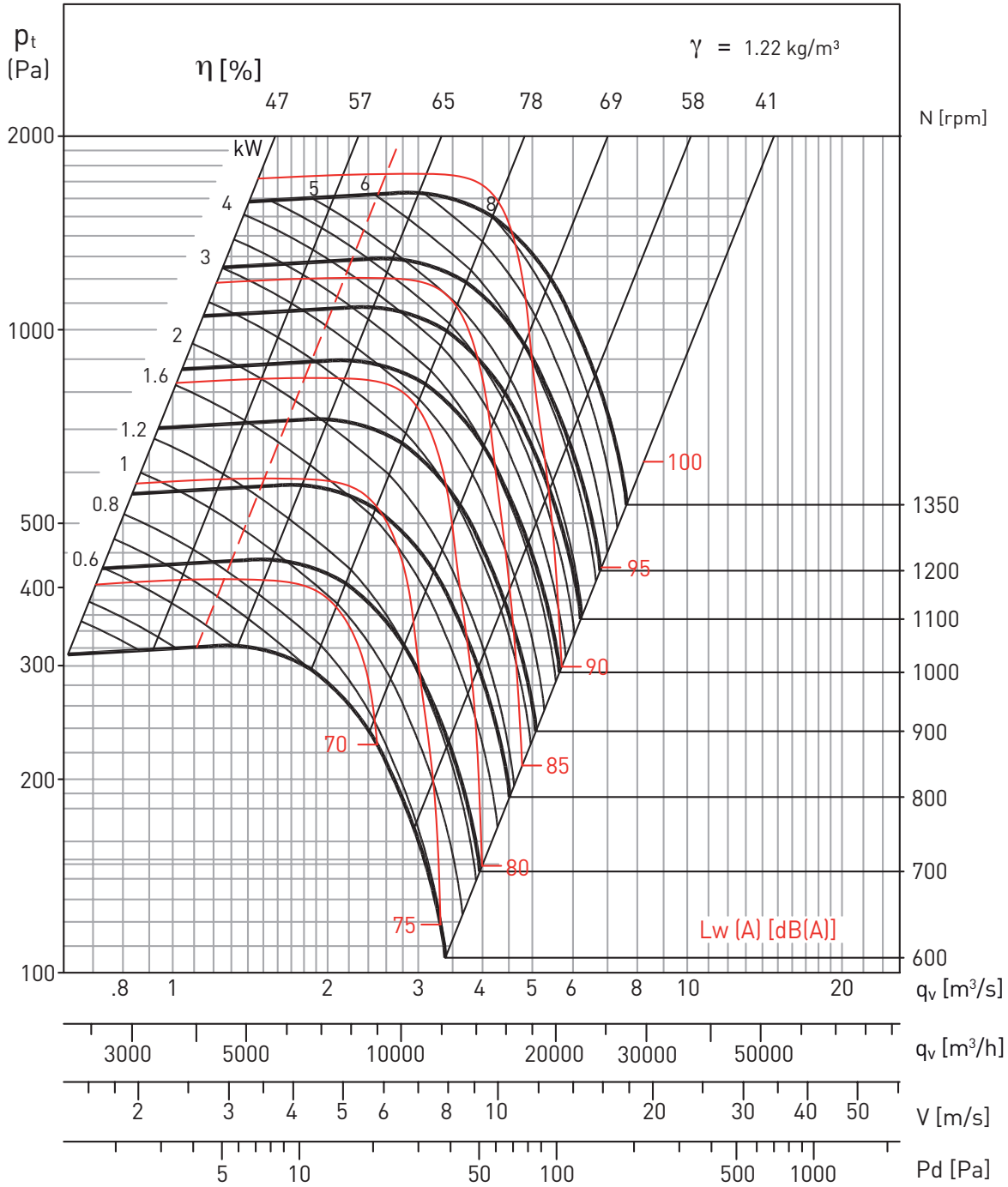

- Performance shown is for Installation type B - free inlet, ducted outlet. Performance ratings do not include the effects of appurtenances in the airstream. Power rating kW does not include drive losses.
- The A-weighted sound ratings shown have been calculated per AMCA standard 301. Values shown are for inlet Lwi(A) sound power levels for installation type B - free inlet, ducted outlet. Ratings do not include the effect of duct end corrections.

BSP 800

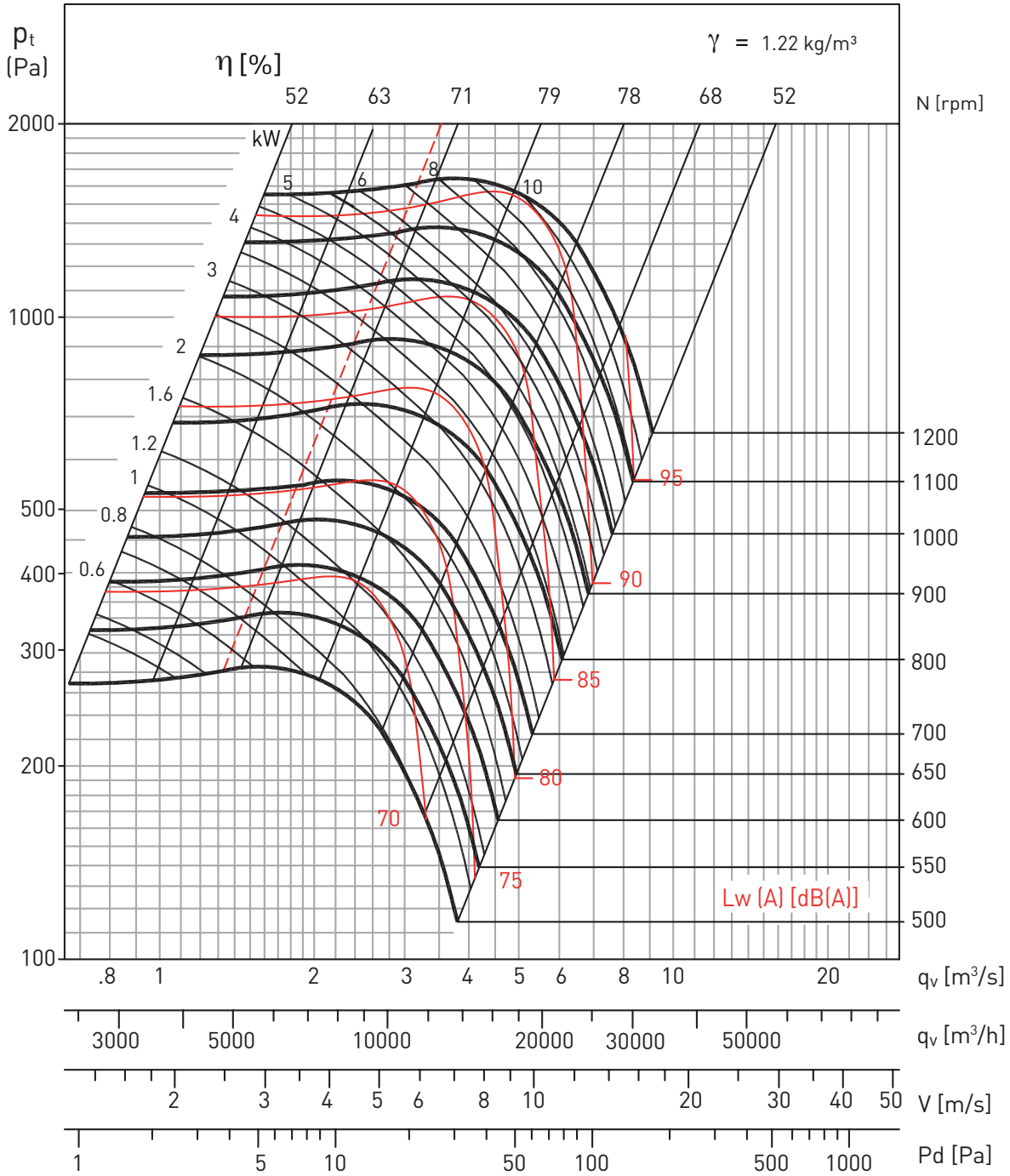

- Performance shown is for Installation type B - free inlet, ducted outlet. Performance ratings do not include the effects of appurtenances in the airstream. Power rating kW does not include drive losses.
- The A-weighted sound ratings shown have been calculated per AMCA standard 301. Values shown are for inlet Lwi(A) sound power levels for installation type B - free inlet, ducted outlet. Ratings do not include the effect of duct end corrections.

BSP 900

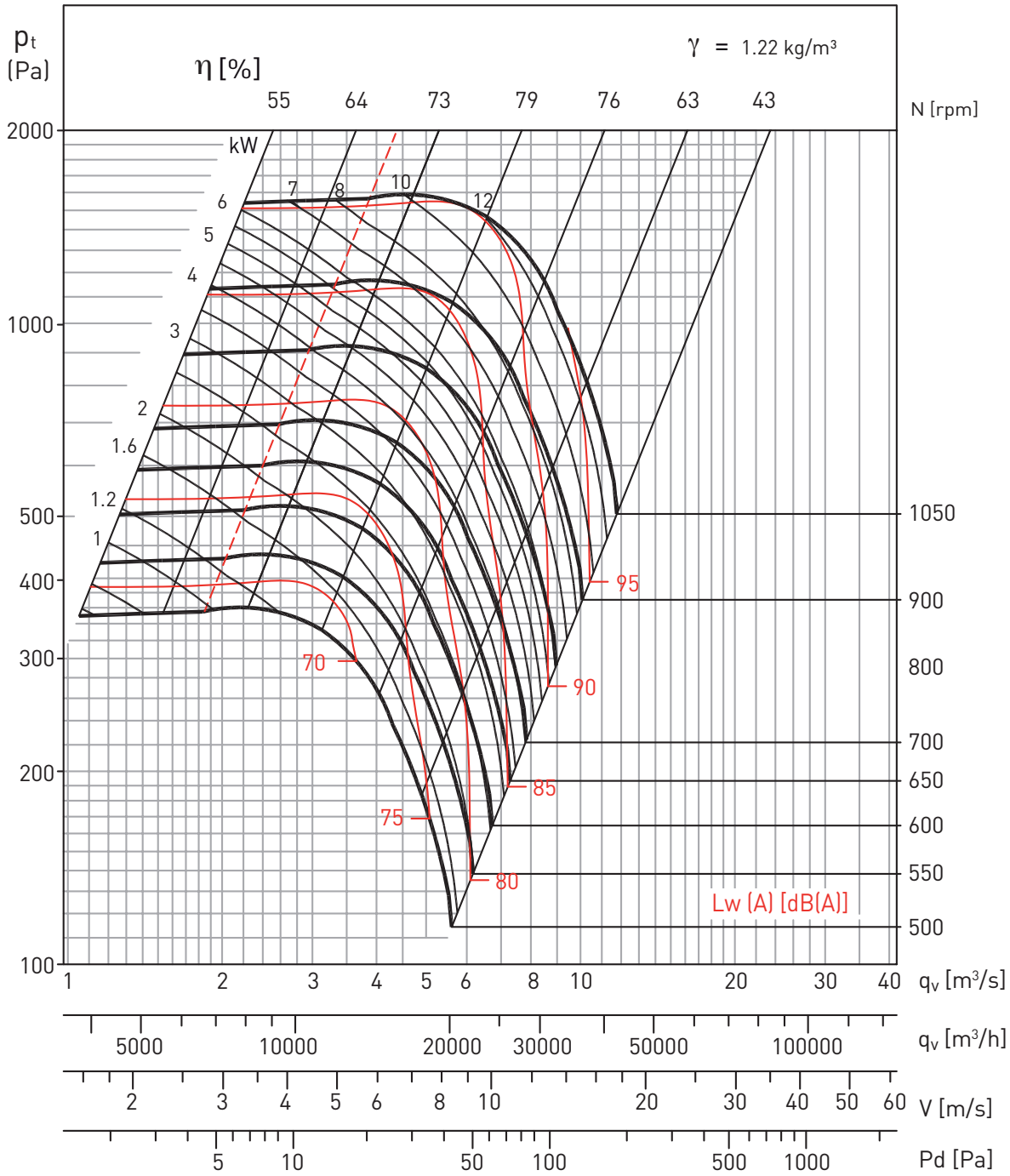

- Performance shown is for Installation type B - free inlet, ducted outlet. Performance ratings do not include the effects of appurtenances in the airstream. Power rating kW does not include drive losses.
- The A-weighted sound ratings shown have been calculated per AMCA standard 301. Values shown are for inlet Lwi(A) sound power levels for installation type B - free inlet, ducted outlet. Ratings do not include the effect of duct end corrections.

BSP 1000

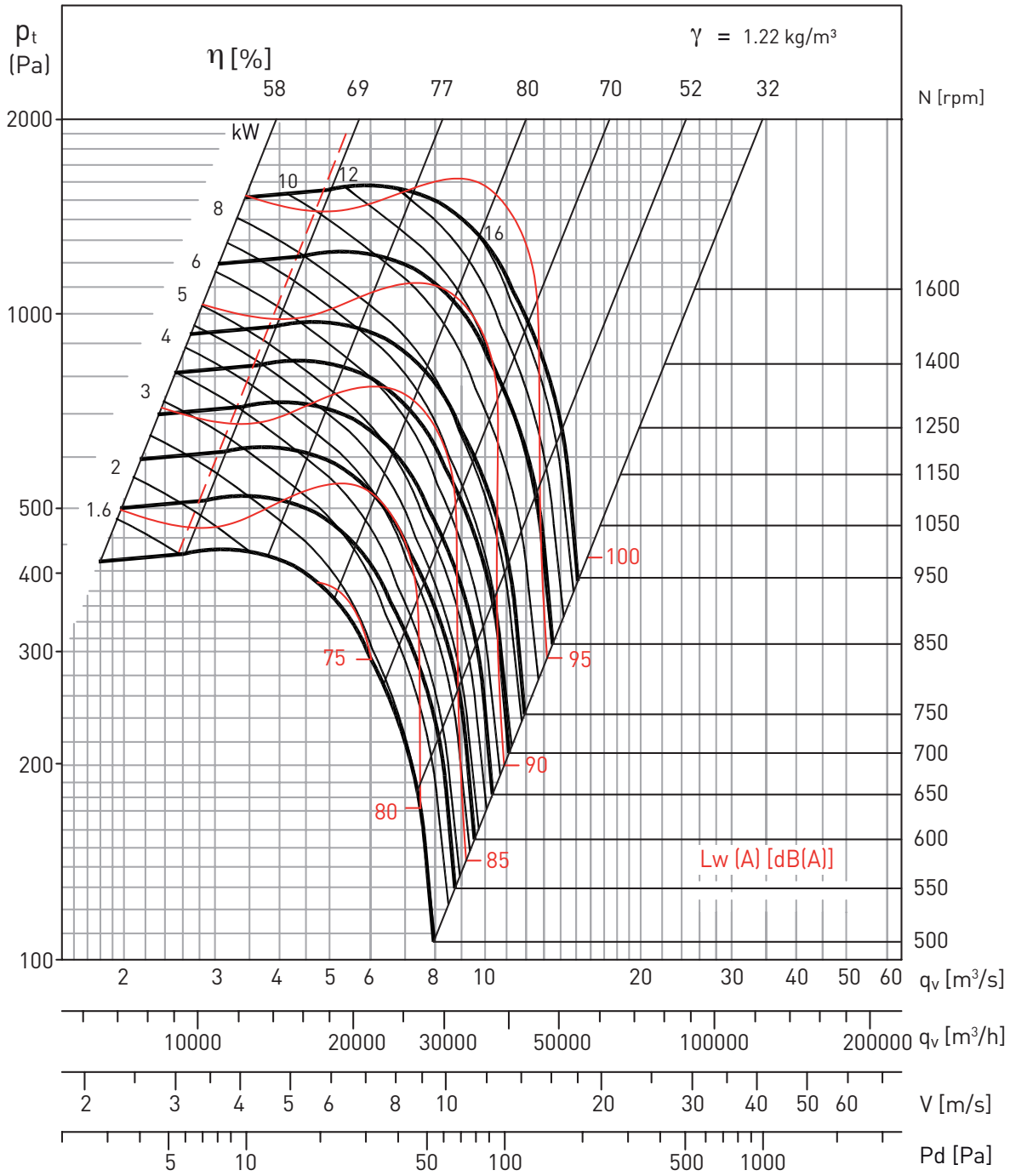

MOUNTING ACCESSORIES

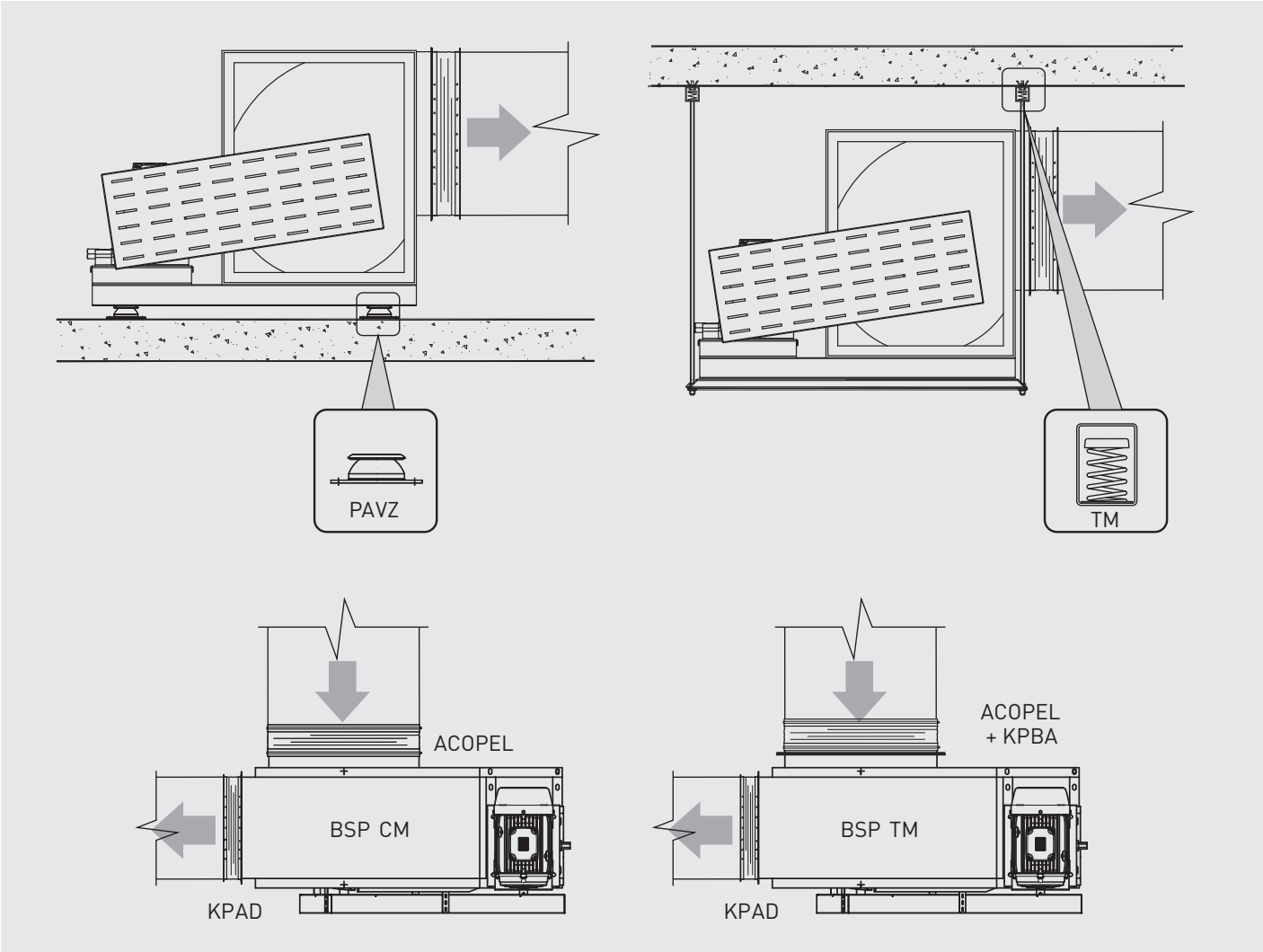

BSP	Inlet guard	Outlet guard	Inlet duct flange	Circular flexible connector	Rectangular flexible connector	Anti-vibration mount	Anti-vibration hanger
315	KPJA-315 S/C	KPJD-315	-	ACOPEL-315	KPAD-315	PAVZ	TM
355	KPJA-355 S/C	KPJD-355	-	ACOPEL-355	KPAD-355		
400	KPJA-400 S/C	KPJD-400	-	ACOPEL-400	KPAD-400		
450	KPJA-450 S/C	KPJD-450	-	ACOPEL-450	KPAD-450		
500	KPJA-500 S/C	KPJD-500	-	ACOPEL-500	KPAD-500		
560	KPJA-560 S/C	KPJD-560	-	ACOPEL-560	KPAD-560		
630	KPJA-630 S/C	KPJD-630	-	ACOPEL-630	KPAD-630		
710	KPJA-710 T	KPJD-710	KPBA-710	ACOPEL-710	KPAD-710		
800	KPJA-800 T	KPJD-800	KPBA-800	ACOPEL-800	KPAD-800		
900	KPJA-900 T	KPJD-900	KPBA-900	ACOPEL-900	KPAD-900		
1000	KPJA-1000 T	KPJD-1000	KPBA-1000	ACOPEL-1000	KPAD-1000		

MOUNTING ACCESSORIES

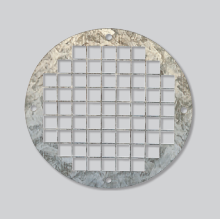

KPJA
Proof guard for mounting at the BSP fan inlet.

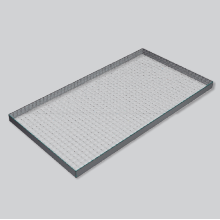

KPJD
Rectangular guard for mounting at the BSP fan outlet.

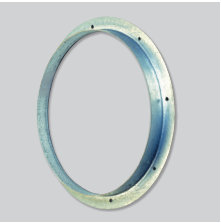

KPBA
Inlet duct flange.

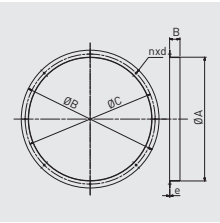

Model	Ø A	B	Ø C	Ø D	e	nxd
KPBA-710	715	60	751	796	2	8x11
KPBA-800	803	60	837	886	2	12x12
KPBA-900	903	60	934	986	2	12x12
KPBA-1000	1004	60	1043	1086	2	12x12

KPAD
Rectangular flexible connector for mounting at the BSP fan outlet.

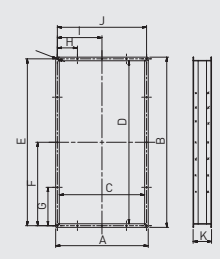

Model	A	B	C	D	E	F	G	H	I	J	K
KPAD-315	279	460	223	404	434	217	-	-	126,5	253	143
KPAD-355	303	508	247	452	482	241	-	-	138,5	277	143
KPAD-400	330	562	274	506	536	-	168	91	-	304	143
KPAD-450	364	624	308	568	598	-	199	108	-	338	143
KPAD-500	401	694	345	638	668	-	209	113	-	375	143
KPAD-560	439	770	383	714	744	-	247	132,5	-	413	143
KPAD-630	489	856	433	800	830	-	265	143,5	-	463	143
KPAD-710	535	954	479	898	928	464	264	141	254,5	509	143
KPAD-800	589	1062	533	1006	1036	518	268	142	281,5	563	143
KPAD-900	651	1186	595	1130	1160	580	280	147,5	312,5	625	143
KPAD-1000	719	1322	663	1266	1296	648	298	156	346,5	693	143

ACOPEL F400 N *
Circular flexible connector.
Certified F400-120.

PAVZ*
Rubber anti-vibration mounts that absorb vibration and attenuate the noise produced in the installation.
(*1 PAVZ= 4 supports in a bag).

TM
Anti-vibration mounts hanger that absorb vibration and attenuate the noise produced in the installation.

* For more information see Mounting accessories.